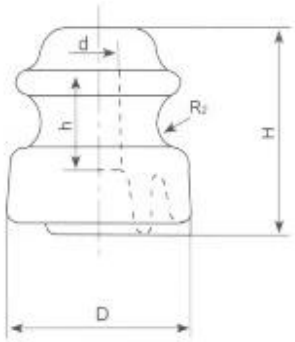

Fig1

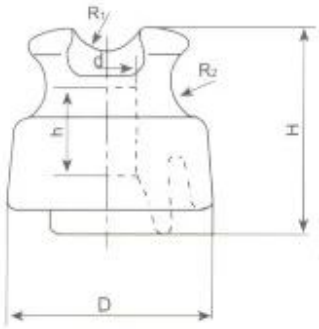

Fig2

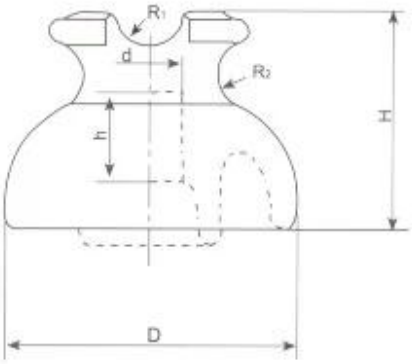

Fig3

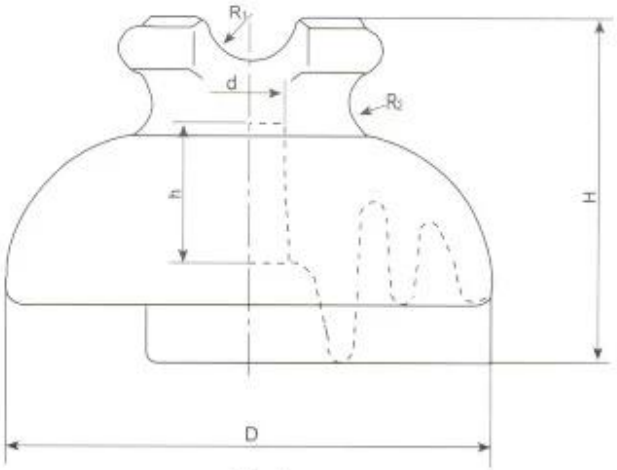

Fig4

□□ □□ □ □□ □□

Cat.No. □□□ ANSI	□□□□	□□ □□	□□ □□ ...□□						□□□□ □ □□ ...□□	□□ □□ ...□□	□□ □□ □□ ...□□
			H	h	□	□	R1	R2			
M10K01 (55-1)	□□	1	□ 1/2	1 3/4	□ 1/4	1		1/2	4	4	2 1/4
M10K02 (55-1)	□□□□ □□□□□ □□.	1	□ 1/2	1 3/4	□ 1/4	1		1/2	4	4	2 1/4
M10K03 (55-2)	□□	2	□ 1/4	1 1/2	□ 3/4	1	5/8	5/8	4	5	□ 3/8
M10K04 (55-2)	□□□□ □□□□□ □□.	2	□ 1/4	1 1/2	□ 3/4	1	5/8	5/8	4	5	□ 3/8
M10K05 (55-3)	□□	□	□ 3/4	1 1/2	4 3/4	1	9/16	9/16	5	7	4 1/2
M10K06 (55-3)	□□□□ □□□□□ □□.	□	4 3/8	1 1/2	4 3/4	1	9/16	9/16	5	7	4 1/2
M10K07 (55-4)	□□	4	4 3/8	1 3/4	5 1/2	1	1	9/16	5	9	5
M10K08 (55-4)	□□□□ □□□□□ □□.	4	4 7/8	1 3/4	5 1/2	1	1	9/16	5	9	5
M10K09 (55-5)	□□	4	4 7/8	2	7	1	1	9/16	6	12	6 1/4
M10K10 (55-5)	□□□□ □□□□□ □□.	4	5 1/2	2	7	1	1	9/16	6	12	6 1/4
M10K11 (55-6)	□□	4	5 1/2	2 1/4	8 3/8	1	1	5/8	7 1/2	15 □	8
M10K12 (55-6)	□□□□ □□□□□ □□.	4	5 1/2	2 1/4	8 3/8	1	1	5/8	7 1/2	15 □	8
M10K13 (55-7)	□□	4	5 1/2	2 1/4	8 3/8	1 3/8	1	5/8	7 1/2	15 □	8
M10K14 (55-7)	□□□□ □□□□□ □□.	4	5 1/2	2 1/4	8 3/8	1 3/8	1	5/8	7 1/2	15 □	8

Cat.No. □□□ ANSI	□□□ □□ □□ V			□□ □□ □□□ □□ □□ □□ V		□□ □□ □□		□□□□ □□ □□□	□□□□ □□ □□
	□□□ □□□ □□	□□ □□□ □□	□□	□	□□	□□□ □□ □□□ □ □□ □□ □□ V	1000kc μV □□ □□ RIV		
M10K01 (55-1)	35 □	20	50 □	50 □	70	5	2500	3000	P-3-M
M10K02 (55-1)	35 □	20	50 □	50 □	70	5	50 □	3000	P-3-M
M10K03 (55-2)	50 □	25 □	70	75	95	5	2500	2500	P-6-M
M10K04 (55-2)	45	25 □	70	70	85	5	20	2500	P 6-M
M10K05 (55-3)	65	35 □	90	100	130	10	5500	2500	□$_2$-10-M
M10K06 (55-3)	55	30	90	90	110	10	50 □	2500	□$_2$-10-M
M10K07 (55-4)	70	40	95	110	140	10	5500	3000	P-10-M
M10K08 (55-4)	65	35 □	95	105	130	10	50 □	3000	P-10-M
M10K09 (55-5)	85	45	115	140	170	15 □	8000	3000	P-15-M
M10K10 (55-5)	80	45	115	130	150	15 □	100	3000	P-15-M
M10K11 (55-6)	100	50 □	135	150	170	22	8000	3000	P-22-M
M10K12 (55-6)			135			22	100	3000	P-22-M
M10K13 (55-7)	100	50 □	135	150	170	22	8000	3000	□$_1$-22-M
M10K14 (55-7)			135			22	100	3000	□$_1$-22-M