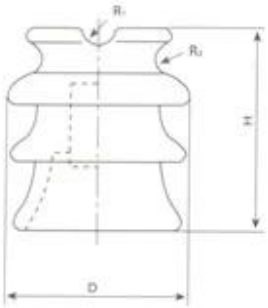

Fig1

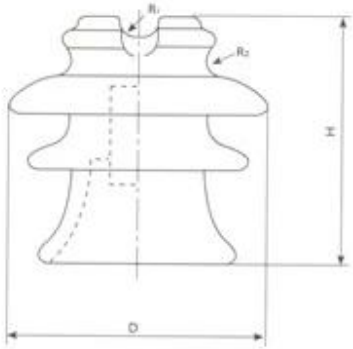

Fig2

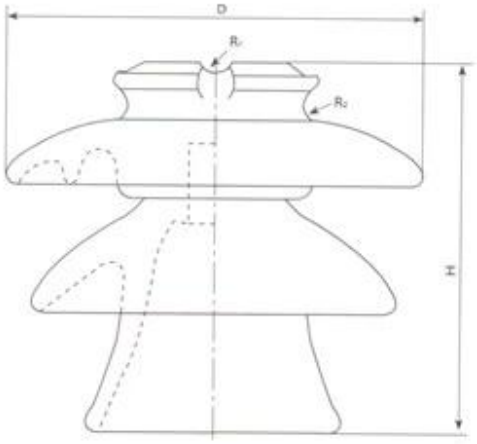

Fig3

MAIN DIMENSTIONS AND STANDARD PARTICULARS

Cat.No	Glaze	Fig. No.	Nominal voltage kV	Main dimensions in				Leakage distance in	Cantilever strength lb.	Power frequency voltage		
				H	D	R1	R2			Dry flashover kV	Wet flashover kV	Puncture kV
Y10K27	Plain	1	3.3/6.6	4 5/16	4	3/8	3/8		2400	60	35	95
Y10K28	Radio freed	1	3.3/6.6	4 5/16	4	3/8	3/8		2400	60	35	95
Y10K29	Plain	2	11	5 1/8	51/2	1/2	3/8	91/2	2400	75	50	150
Y10K30	Radio freed	2	11	5 1/8	51/2	1/2	3/8	91/2	2400	75	50	150
Y10K31	Plain	2	15	5 3/8	6	1/2	3/8	113/4	2400	80	55	150
Y10K32	Radio freed	2	15	5 3/8	6	1/2	3/8	113/4	2400	80	55	150
Y10K33	Plain	3	22	711/16	91/16	7/16	3/8	17	3000	115	75	200
Y10K34	Radio freed	3	22	711/16	91/16	7/16	3/8	17	3000	115	75	200
Y10K35	Plain	3	33	9 5/8	11	7/16	7/16	244/5	3000	130	95	210
Y10K36	Radio freed	3	33	9 5/8	11	7/16	7/16	244/5	3000	130	95	210

Cat.No	One-minute power frequency kV		50% impulse flashover voltage		Radio-influence voltage		No. used before
	Dry withstand	Wet withstand	Positive kV	Negative kV	Test voltage to ground kV	Maximum RIV at 1000kHZ μV	
Y10K27	50	30	95	120	10	5500	P-6-Y
Y10K28	50	30	95	120	10	50	P-6-Y
Y10K29	65	45	115	150	15	8000	P-11-Y
Y10K30	65	45	115	150	15	100	P-11-Y
Y10K31	70	50	130	175	15	8000	P-15-Y
Y10K32	70	50	130	175	15	100	P-15-Y
Y10K33	100	70	180	240	22	12000	P-22-Y
Y10K34	100	70	180	240	22	100	P-22-Y
Y10K35	115	90	215	290	30	16000	P-33-Y
Y10K36	115	90	215	290	30	100	P-33-Y