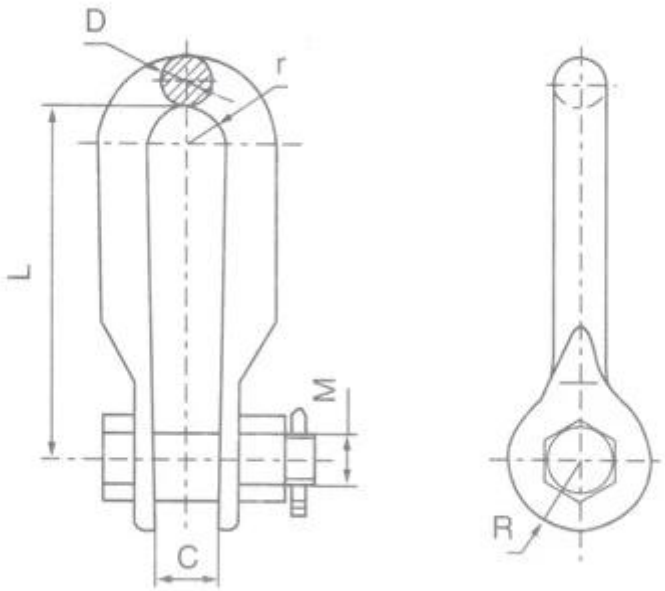

Cat. No.	dimensions(mm)						rated failure load kN	Weight kg
	C	M	D	L	r	R		
UL-7	20	16	16	120	15	22	70	0.7
UL-10	22	18	18	140	17	24	100	0.9
UL-16	26	24	22	140	19	32	160	1.6
UL-20	30	27	24	160	22	36	200	2.9